WARRANTY

1. Subject to clauses 2 & 3 of this warranty, A.F. Gason Pty Ltd ACN 004 667 556 warrants the following components of its heaters against defects in workmanship and/or materials for the following periods from the date of purchase:

a) the firebox for ten years;
b) the paint finish for a period of 12 months if the purchaser has followed the instructions provided by Gason in the operation and Installation Instructions manual; and
c) all other components for 12 months except the glass, fire brick lining or baffle plate if, in the opinion of Gason, these items have been damaged by impact.

2. This extended warranty does not apply;

a) if the heater is purchased from a person who has not been authorised by Gason to sell its products;
b) if, in the opinion of Gason, the heater or any other component has been subject to abuse, misuse, alteration, modification or has not been installed, operated or maintained in accordance with the instructions provided by Gason; or,
c) to owners other than the original purchaser.

3. If you believe that the heater you purchased contains a manufacturing defect and you wish to make a claim under this warranty, please contact an authorised Gason service centre to arrange for an assessment.
4. If, after assessing the heater, Gason determines that the heater contains a manufacturing fault, Gason may at its discretion:

a) replace the heater;
b) repair or replace specific components of the heater; or
c) provide a full refund.

5. Parts replaced under warranty are warranted for the balance of their original warranty period.
6. If, at the discretion of Gason, the heater or any part needs to be replaced, serviced or repaired at an authorised Gason service centre, then the person claiming under this warranty must pay all costs associated with:

a) returning the heater; and
b) the delivery or collection of any new or repaired heater.

Our goods come with guarantees that cannot be excluded under the Australian Consumer Law. You are entitled toa replacement or refund for a major failure and for compensation for any other reasonably foreseeable loss or damage. You are also entitled to have the goods repaired or replaced if the goods fail to be of acceptable quality and the failure does not amount to a major failure.

Any benefits you receive under these warranties are in addition to other rights and remedies that you may have as a consumer under law in relation to the heater to which these warranties relate.

These warranties are given by:
AF Gason Pty Ltd
Blake Street
Ararat VIC 3377
Please contact us if you have any queries on:
Phone: 03 97633200
or email us via the "Contact Us" section of our website: www.gason.com.au

AF Gason Pty. Ltd. reserves the right to modify or alter specifications, material, etc. in the interest of product improvement.

Jindara® WOODHEATING

Tilga Freestanding

Operation & Installation Instructions

Please keep these instructions for future reference.

Rev D

232342

WARNING

Read and follow these instructions carefully before installing and using this appliance

To aid heater installation, remove door, top plate, baffle system and cast iron liners to reduce overall heater weight. **SEE PAGE 15 FOR PALLET REMOVAL.**

WARNING

Safety Warnings

- A flue fire with resulting damage may occur if the appliance is not installed, operated and maintained as per this booklet.
- Never place combustible materials such as wood, paper or furniture near the appliance.
- This appliance is designed to burn dry wood. Do not burn rubbish, driftwood, flammable liquids or any substance containing salts or corrosives.
- This appliance must not be installed and operated in an area where kerosene, petrol, paint thinner or other flammable liquid is used or stored.
- The flue system must be inspected and cleaned annually or sooner if required. Failure to do so could result in an excessive buildup of creosote which may result in a flue fire which may damage the flue or cause damage to your home.
- The surface of the appliance becomes hot during operation. Do not touch the surface of this appliance. Keep children away from this appliance during operation. Do not allow anyone to operate this appliance who is not familiar with this instruction booklet.

WARNING

Paint Curing and Care

Your heater is coated with the best available heat resistant paint. Even though the paint has been baked after application, it may require further temperature curing. It may, if you overfire the heater on its first fire, discolour. For your first two or three firings, never exceed medium air setting and always have the fan on when above low burn. Do not wipe the heater while the paint is curing. After the paint has cured the only maintenance required to maintain the heater's finish is to wipe it with a soft cloth. Do not use any commercial cleaners or solvents on the paint finish.

We are proud of the presentation of our products. If at any time you need to freshen up the paint, your local dealer has touchup paint available for purchase.

This heater is painted in stove bright Metallic Black - code 6309.

If you have any enquiries, please contact the dealer from whom you purchased your heater:

PLEASE COMPLETE:

Dealer Name

Dealer Address

Phone:

Please attach your original purchase dockets to this booklet for future reference.

Basic Dimensions

Removing heater from pallet:
• Remove x2 Tek screws from rear of pedestal base.
• Remove x4 Phillips Head screws holding the pedestal filler panel to the pedestal, and removed panel to gain access to a third Tek screw which holds to pedestal base to the pallet.
• Remove thrid Tek screw and re-attatch pedestal filler panel and x4 Phillips Head screws.

O/All weight: 200kg
Package dimensions: 980Hx795Wx685D

To aid heater installation, remove door, top plate, baffle system and cast iron liners to reduce overall heater weight.

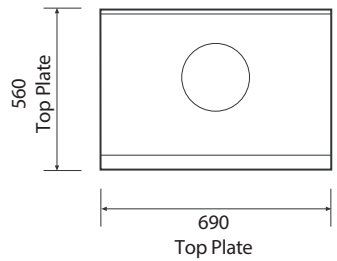

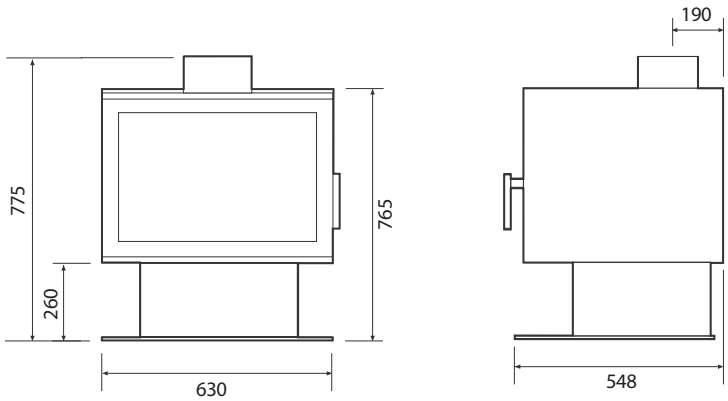

Firewood

Getting the most out of your firewood
Firewood is a sustainable source of energy and when used correctly can provide a cost effective form of heating in your home. Too often poor heating results and operational issues are attributed to using unseasoned wood which leads to excess smoking, causing creosote buildup and dirty glass. Wood should be stored in a dry place where good ventalition is available. Freshly cut wood should be stored for between 12-24 months before burning.

Use only hardwood with your Jindara Tilga.

Thermal efficiency
A wood's efficiency does not depend only on its type, but also on its moisture content as well as the temperature of the combustion chamber. To achieve a greater efficiency and longer burn cycle out of your Jindara Tilga, without the emissions of hazardous particulates, your wood must be well seasoned.

Ideally, wood should not be burnt when its moisture content is above 20%. A moisture meter to measure moisture content is a handy addition.

An example of available thermal efficiency for a piece of wood as a fuel source at varying moisture levels.

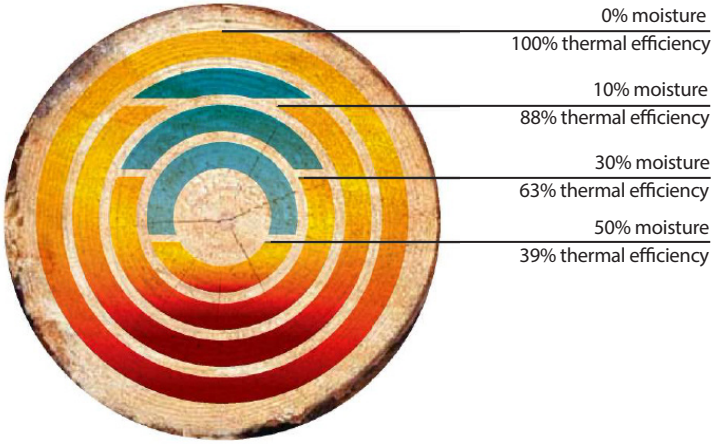

Figure 14

The combustion process of burning wood
When wood is heated up to approximately 100 degrees celsius, moisture begins to evaporate from the fuel. There is no heating value from the wood at this point. As moisture releases from the wood, it reduces the efficiency of the combustion process robbing heat energy from the wood. This demonstrates the importance of dry and well seasoned wood.
As firebox temperatures reach 250-300 degrees celsius, wood solids begin to break down and release volatile gases which ignite and produce heat.
From 300+ degrees celsius, the main energy available from wood is released when fuel vapors containing up to 60% of the wood's potential heat is released.

Understanding combustion principles and learning how to manipulate various conditions surrounding the operation of your Jindara Tilga enables you to achieve maximum comfort and efficiency from your Australian made wood heater.

Installation

WARNING **Installation**	THE INSTALLATION OF THIS APPLIANCE MUST BE CARRIED OUT AS PER THIS MANUAL AND THE FLUE MANUFACTURER'S SPECIFICATIONS. WE RECOMMEND THAT YOU USE A QUALIFIED INSTALLER TO CARRY OUT THE INSTALLATION. If you have any other enquiries, please contact the dealer from whom you purchased your heater. THIS APPLIANCE WEIGHS IN EXCESS OF 200 KILOGRAMS. EXTREME CARE SHOULD BE TAKEN WHEN HANDLING THE APPLIANCE.

AF Gason Pty. Ltd. accepts no liability whatsoever for any interpretation of AS/NZS 2918:2018.
It is important you understand these installation instructions and minimum clearances to combustible materials before selecting a position for your Jindara Tilga to ensure safe and correct installation is achieved.

Installation permit
Depending on your local authority requirements, a permit may be required for the installation of your heater. It is your responsibility to arrange the same.

Flue requirements
As per the dimensions in Figure 1 & 2 the Jindara Tilga can be installed with a Perforated 6" Default Flue Kit including a 900mm180 degree flue shield, or Figure 3 & 4 a Solid 6" Default Flue Kit.
The flue system installed with the Jindara Tilga must comply with Australian and New Zealand installation standards AS/NZS 2918:2018, and be installed to the flue manufacture's instructions.
The performance of your Jindara Tilga is highly reliable on an effective flue system. In many cases poor start-up, dirty glass, down draft which causes smoking when the door is open, and a reduction in heat outupt can all be related to the flue system been too short, or incorrect installation. Too tall a flue can result in excess draft and short burn times along with excessive heat output.

Clearance to combustibles
The Jindara Tilga freestanding heater conforms to AS/NZS 2918:2018 when positioned in relation to combustible surfaces as shown in Figure 1, 2, 3 or 4 on the following pages.
These dimensions in Figure 1, 2, 3 & 4 state the minimum distance the Jindara Tilga can be placed in relation to any combustible materials - plaster, wallpaper, timber, MDF, etc.

In the instance your Jindara Tilga is surrounded by non-combustible or fire retardant materials - brick, stone, concrete, cement sheet, villaboard or similar, wall clearances can be reduced to 50mm. A 50mm clearance is required to ensure room air can circulate around the wood heater during operation.

For additional clearance details, or to access the Jindara Tilga Freestanding conformance certificate, please contact the Jindara dealer from whom you purchased your heater.

Hearth & floor requirements
If the Jindara Tilga will be installed onto a non-combustible floor such as a brick, stone or concrete slab with tiles, etc. which is at least 9mm thick, and extends at least 300mm in front of the appliance base, a hearth or floor protector may not be required.
If the Jindara Tilga is to be installed onto a combustible floor, a minimum 9mm bellis board, or similar non-combustible hearth or floor protector must be placed in between the appliance and the combustible floor. At a minimum, the floor protector must extend 300mm in front of the appliance base. The protector must be at least 945mm wide and 840mm deep.
• If desirable, the floor protector can extend 895mm deep for perforated flue installations, 1000mm for a double-skin solid flue installations or larger to meet skirting boards or walls at the rear of the appliance when installed as per the rear wall clearances.

Installation (Continued)

Parallel Installation - **Perforated** Outer Flue Kit
- 6" Active Flue with an 8" **Perforated** painted Outer Flue casing, which extends from the top of the heater to the drop box at the ceiling level, and an additional 180 degree x 900mm heatshield in between the active flue and outer casing.

- 50mm from the rear wall to the edge of the appliance rear panel.
- 325mm from the side wall to the edge of the appliance side panel.
- Floor protector should extend 300mm in front of appliance base.

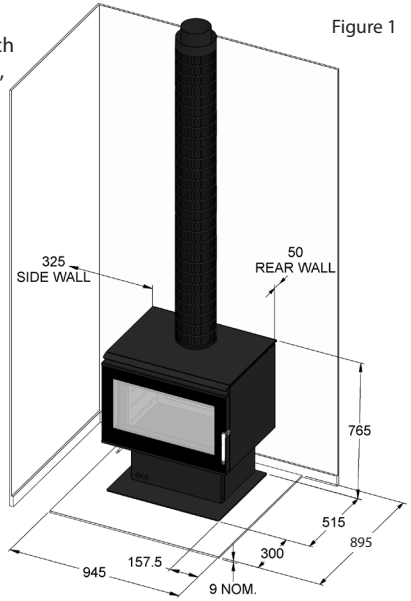

Figure 1

Corner Installation - **Perforated** Outer Flue Kit
- 6" Active Flue with an 8" **Perforated** painted Outer Flue casing, which extends from the top of the heater to the drop box at the ceiling level, and an additional 180 degree x 900mm heatshield in between the active flue and outer casing.

- 75mm from walls when measured from the closest point of the appliance (45deg to both walls).
- Floor protector should extend 300mm in front of appliance base.

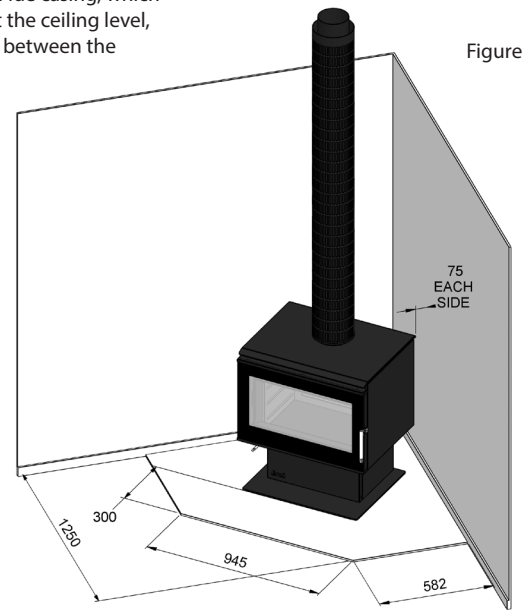

Figure 2

Troubleshooting

- **Noisy Fan**

Turn the power off and remove the three pin plug from the power point.
Remove the four screws that hold the front of the pedestal and fan access panel. Remove the panel.
Disconnect the wiring loom via the plastic joiner. Unscrew the wing nuts which hold the fan in position and remove the fan. Clean any dust with a dry paint brush and vacuum the fan blades. Clean around the motor. After completion place two or three drops of sewing machine oil on the shafts at the bearings. Replace the fan in reverse to the removal.

- **Fan not working**

Check the power connection with another appliance. If the power point is O.K. shift focus to the fan or the switches. Move thermostat switch into the 'overide' position, and select one of the three fan speeds. If the fan fails to function, isolate power as above, remove pedestal filler panel to gain access to loom. Check that the terminals on the loom and both switches are firmly connected. If the fan still fails to function, remove the fan and switches by firstly removing the knob off the rotary switch by pulling it away from the heater. Undo the holding nut and pull the switch out. Squeeze locator tabs together on the rear of the thermostat switch and push through outside of pedestal.
Disconnect the wiring from the power lead and remove the fan. Convey the same to the authorised Jindara Dealer from whom you purchased your unit for service.
Replace in the reverse order.

- **Air control jamming**

Access to the air side is available when the door is opened.
There are three screws holding the air slide in place. Undo them and remove the air slide. Wipe any ash or dust that may have accumulated on the back of the air slide or on the face of the heater. If any burrs have developed on the back of the air slide or on the face of the heater, rub them off with fine wet and dry sand paper till you have a smooth surface and edges. Replace the air slide and make sure the washers and spacers are on the bolts when you screw the bolts back into the face of the heater. Do not apply any type of lubricant to the air slide whatsoever as this will attract dust and make the slide stick.

- **No overnight burn**

Remove the air slide as per air control jamming and check that the air slide is hard against the face of the heater. If it is loose, tighten up the bolts holding the air slide to the face of the heater. Do not overtighten.
Check that the door rope has an even indentation from its contact with the face of the firebox. If it is uneven and it appears as though air could leak through the seal, the door hinge and latch can be adjusted or the door rope may need to be replaced. Refer door adjustments and rope replacement instructions.

- **Excessive ash build up**

Some woods will give large amounts of ash despite how you run the heater. Others will give you very little. Use the woods which is most convenient for you as long as it is dry. After a period of time you will get to know when to empty your unit. Bark will give you excessive ash. Try not to burn it. If you are burning wood that gives you charcoal, you may find that after running the heater say for 8 hours at maximum burn rate, the charcoal builds up excessively. Overnight burn will reduce this charcoal back to a fine ash. If you are not ready to shut down for overnight burn when you next fuel the stove, load the stove with only one piece of wood and lay it across the firebox on top of the charcoal. Open the air control wide open and you will find the charcoal will burn down with the one piece of wood. Repeat the process until the ash level is significantly reduced.

- **Excessive smoking - smoke entering the room maybe caused by**:
  - Insufficient length of flue (Flue to be 4500mm minimum underneath the base of heater to underside of cowl) *Increase height of flue*
  - Flue downdraught - *Consult dealer or increase height of flue.*
  - Creosote build up in flue - *Remove cowl and clean flue as per cleaning instructions. Check moisture content of wood.*

WARNING **Overfiring**	NEVER OPERATE THE HEATER WITH THE DOOR LOOSE, OR SUCH THAT THE FIREBOX IS NOT AIR TIGHT. OVERFIRING COULD RESULT IN DETRIMENTAL WEAR AND TEAR ON THE FIREBOX AND FLUE SYSTEM.

Basic Spare Parts

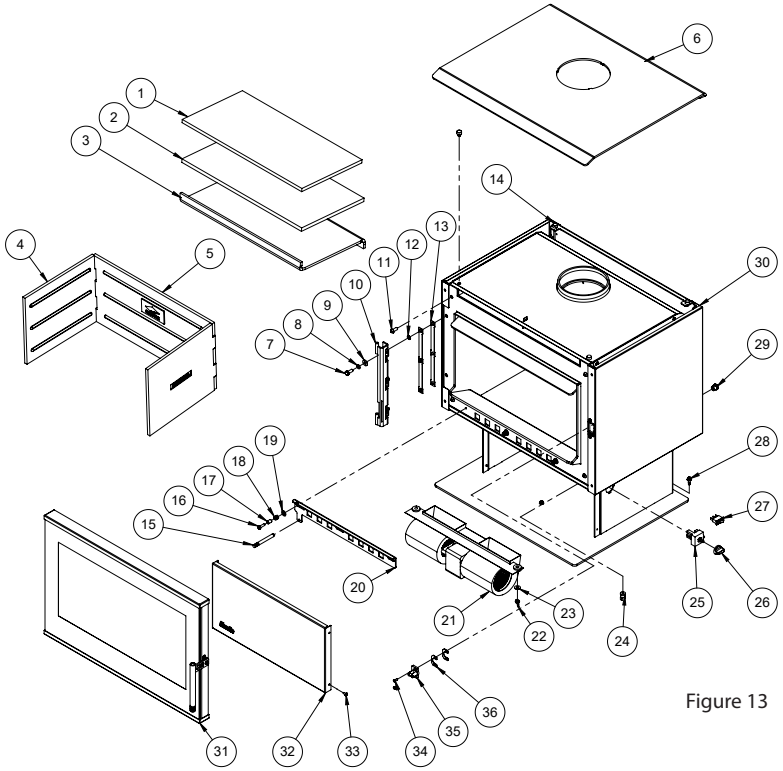

Figure 13

Ref.	GPN	Description	Ref.	GPN	Description
1	230932	Calcium Silicate Baffle	19	907400	Washer Flat 18 x 10
2	232182	DuraBlanket Baffle	20	230959	Air Slide Panel
3	230260	Steel Baffle Plate	21	203903	Twin Barrel Fan
4	231032	Cast Iron Liner - LH & RH	22	213146	Wing Nut M6
5	231030	Cast Iron Liner - Rear	23	906201	Washer Flat 1/4 x 3/4
6	230930	Top Panel	24	214289	Thermostat Switch
7	917308	Screw Set M8 x 20	25	236475	Switch - 3 Positions
8	909004	Washer Spring M8	26	227074	Switch Knob
9	907414	Washer Flat 8x20	27	232037	Switch - 2 Position
10	230980	Door Hinge	28	203914	Tek Screw 14-20 x 22
11	922313	Screw Cap M8 x 20	29	203651	Grommet Cord Grip
12	910106	Washer Star M8	30	235538	Firebox Assembly
13	234101	Hinge Shim Plate	31	235529	Door Assembly
14	231821	Rubber Bumper	32	230262-10	Pedestal Front Panel
15	231804	Air Slide Rod	33	294607	Screw S/Tap 1/2"x10G
16	917209	Screw Set M6 x 20 P/Head	34	917119	Screw C/Sunk M5 x 20
17	213098	Bush - Air Slide	35	234342	Door Catch Assembly
18	212974	Spring	36	234016	Latch Shim

Installation (Continued)

Parallel Installation - **Solid** Outer Flue Kit
- 6" Active Flue with an 8" **Solid** painted outer flue casing.

Figure 3

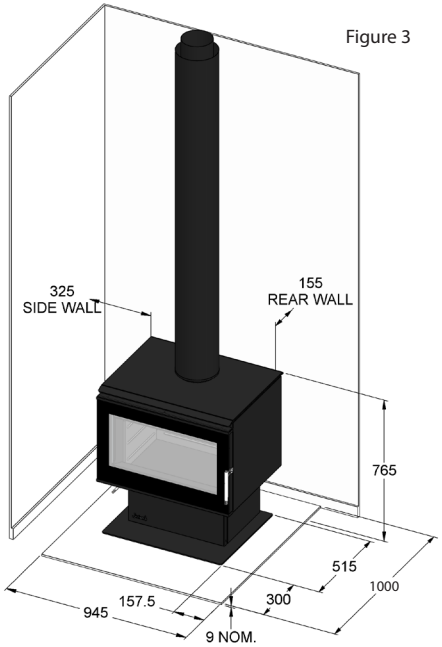

- 155mm from the rear wall to the edge of the appliance rear panel.
- 325mm from the side wall to the edge of the appliance side panel.
- Floor protector should extend 300mm in front of appliance base.

Corner Installation - **Solid** Outer Flue Kit
- 6" Active Flue with an 8" **Solid** painted outer flue casing.

Figure 4

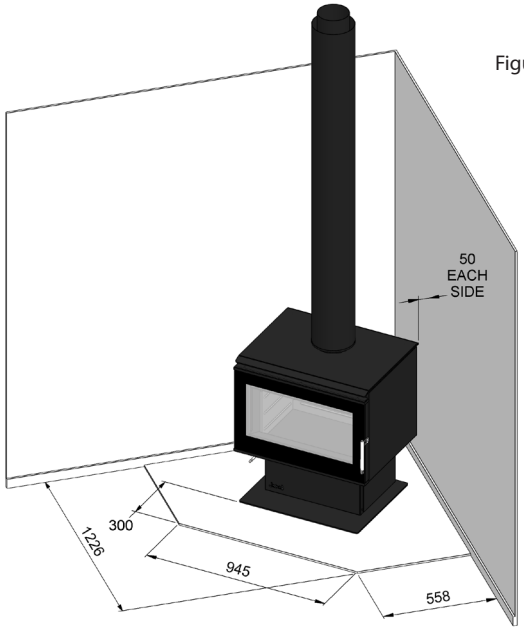

- 50mm from walls when measured from the closest point of the appliance (45deg to both walls).
- Floor protector should extend 300mm in front of appliance base.

Installation (Continued)

Baffle System

WARNING

Insulated Baffle System

If the baffle system is damaged, burnt out, discarded or not installed as per these instructions, high flue temperatures, losses in combustion efficiency and excess smoking can occur.
To operate this appliance as it is intended, and to ensure product longevity is achieved, ensure the baffle is installed as per these instructions.

If firebox, flue failure or excess damage to the appliance or its surroundings is reported due to incorrect installation or operation of the Insulated Baffle System, AF Gason Pty. Ltd. reserve the right to disallow any warranty or claims in relation to the abovementioned.

The Jindara Tilga's baffle system comprises of three components:
- 8mm Steel Plate
- 13mm DuraBlanket
- 12mm Silica board

When removing the baffle system to clean flue, the baffle system must be inspected and replaced in the configuration as shown in Figure 5.
If the systems components are compromised in any way it is important components are replaced.

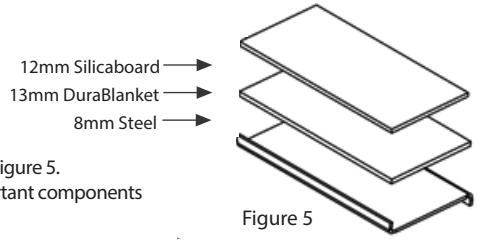

Figure 5

Fitting the Insulated Baffle System

1. Feed the baffle plate through the door opening with front edge fold facing up. Feed plate all the way to the rear of the firebox.
2. Lift front of baffle over Pin A and slide towards the front of heater.
3. Lift the rear so that the baffle is horizontal and move it towards the rear of the firebox.
4. Lower over Pin B.
5. Ensure baffle is sitting on Pins A and B.

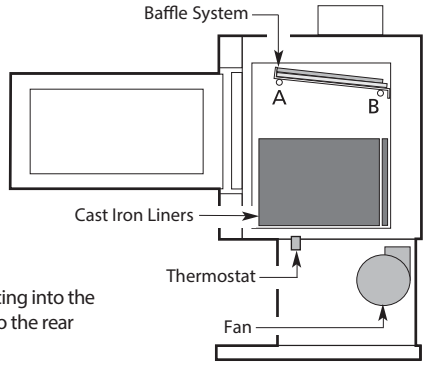

Figure 6

Placement of Cast Iron Liners into firebox

The rear cast iron liner is to be positioned to the rear with rib and logos facing into the firebox. Side cast liners are to be positioned on each side and interlock into the rear cast liner. Refer Figure 7 for orientation.

Final inspection prior to use

- Ensure the baffle system is firmly located and in the correct orientation
- Ensure cast iron liners - side and back - are positioned correctly.
- Check fan cord has not been damaged during transit.
- Plug in fan cord and ensure cord does not touch heater surface.
- Switch thermostat switch to 'override' and select one of three speeds to ensure fan is operational.
- Check door seals are in place.

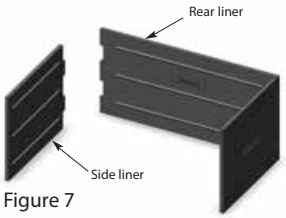

Figure 7

Maintaining & Servicing your Jindara (Continued)

Ensure all maintenance is carried out when appliance is cool.

Figure 12

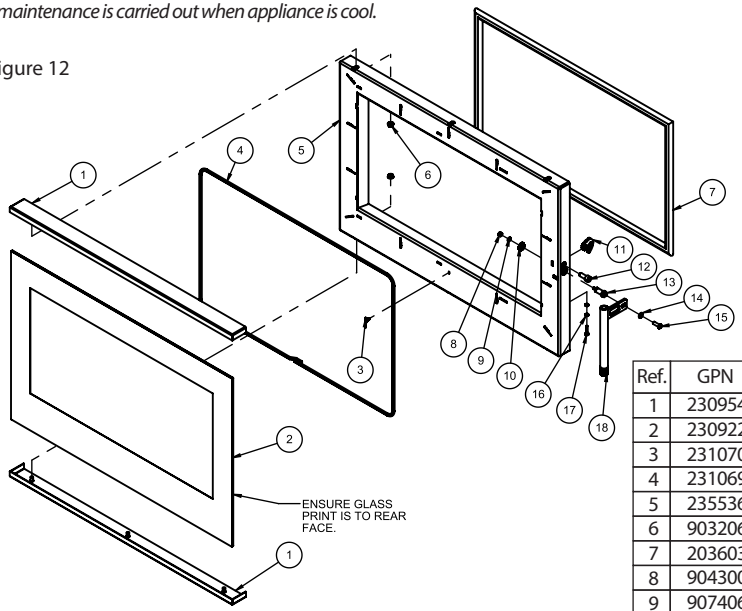

Ref.	GPN	Description
1	230954	Retainer
2	230922	Glass
3	231070	Dart Clips
4	231069	Rope 6mm OD
5	235536	Door Frame
6	903206	Nut Whizlock M6
7	203603	Rope 19mm OD
8	904300	Nut Conelock M5
9	907406	Washer M5.5x10
10	234344	Gear
11	234355	Catch
12	922311	Screw Set M8 x 20
13	231816	Shaft
14	907204	Washer M6x12.5
15	932202	Screw M6
16	902006	Nut M4
17	917007	Screw Set M4 x 20
18	231805	Handle

Replacing your glass
- Open door and lift free of hinge.
- Place door face down on a soft flat surface to protect paintwork and glass.
- Remove glass retainers by removing x6 M6 whizlock nuts.
- Lift door frame away from glass. Note how the 6mm OD glass sealing rope is placed around the door frame - dispose of old glass safely.
- Fit new 6mm OD glass sealing rope onto the door frame with new x6 dart clips. Ensure clips are positioned with pointed extrusion facing towards the edge of the door frame.
- Place the glass back onto the door frame with the 6mm OD door sealing rope in position.
- Fit glass retainers back to top and bottom of the door, and attach to door frame with the x6 M6 whizlock nuts. Tighten nuts evenly until the retainer holds the glass. Do not over tighten the retainers as this could break the glass.
- Mount door back onto hinge, close and ensure fitment safe and correct.

Fitting a new door seal
- Open door and lift free of hinge.
- Place the door face down on a soft flat surface to protect the paintwork and glass.
- Remove old rope and scrape old glue from rope retaining groove.
- Clean the rope retaining groove with a clean, dry cloth to remove any old dust and debris.
- Apply a generous bead of roof and gutter silicon around the rope retaining groove.
- Press the new 19mm OD door rope into the rope retainer groove, placing the start-stop joint to the bottom corner of the hinge side of the door.
- Refit door, and close to apply pressure to the new rope.

Note: Hinge and door catch may need to be adjusted to allow the door to close completely, if previously adjusted to accommodate an ageing rope.
- Leave door closed for at least 12 hours before lighting the heater, and initially run at a low temperature to allow adhesive to fully bond to the door.

Maintaining & Servicing your Jindara

Cleaning the glass

Generally the only time you will possibly need to clean your glass is after a long overnight burn. If you find that you have a wet sticky black film on your glass (creosote), it is better to burn the heater as normal for one load of wood. When the wood has burnt down to a hot bed of embers, open the door and leave it wide open until the glass cools sufficiently to be wiped with a damp cloth. This should clean all the white smoky film off the glass. Creosote on the glass is normally a sign that you have tried to get too long an overnight burn or you have burnt excessively wet or green wood. If the film on the glass won't come off with a wet cloth, you can use wet ash from the ash bed as a cleaner or commercial products such as Crystal Clear, Johnson Foam Clean or Windex.

To maintain an efficient and safe use of your Jindara Tilga, you may need to adjust the door hinge and catch to ensure the door closes safely and correctly over the duration of its life.

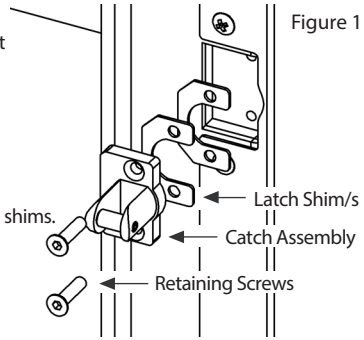

Figure 11-1

Adjusting door catch

- Open door to gain access to catch.
- Using a 3mm Allen key, remove the two catch retaining screws and set aside.
- To tighten the latch, remove one shim. To loosen the latch, replace any removed shims.
- Once the desired setting has been achieved, re-fit the catch assembly using the two retaining screws.
- Note that if an adequate seal cannot be achieved through the removal of one shim, a replacement door rope may be required.

Adjusting door hinge

The door hinge defines the door alignment to the heater and the door catch, as well as determining the amount of pressure applied to the main door rope at the hinge side of the door.

To align door:

- Slightly loosen 3 x M8 Bolts securing the hinge to the heater. The upper bolts should be loosened 1- 1+1/2 turns, while the lower bolt should only be loosened 1/2 a turn.
- Align door horizontally by pivoting the door about the lower bolt. Note that there is no provision for lateral adjustment of the door hinge position.
- Check the alignment of the door by measuring vertically from the underside of the door at each outer edge, to the base of the unit, as per figure 11-2. This measurement should be taken with the hinge bolts tightened and with the door hanging under its own weight.

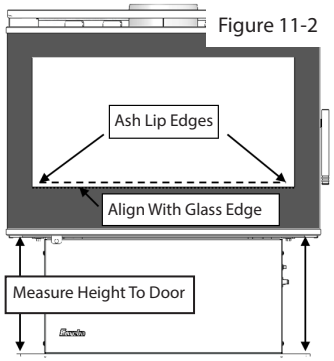

Figure 11-2

To adjust hinge shims:

- Open door and lift free of hinge, and place on a soft flat surface while servicing the hinge.
- Remove the door hinge and fasteners as shown in figure 13.
- Remove x1 hinge shim plate in order to tighten the seal of the door rope.

The maximum number of shims permitted behind the hinge is 2, fitted as standard.

- Fit door and re-align door to catch and firebox before fully tightening M8 bolts.

Adjusting door handle

- The door handle position can be adjusted to align the handle with the door glass, when the handle is in the closed position.
- Adjustment is carried out by winding the adjuster screw in or out, in order to change the rest stop position of the handle. This should be done with the door open and the handle resting in the closed position.
- To adjust the position of the screw, first release the lock nuts, then use a Phillip's head screw driver to turn the adjuster screw either in or out depending on the adjustment required.
- Once the desired adjustment position has been achieved, the lock nut should be re-tightened against the retaining plate. Refer to figure 11.3.

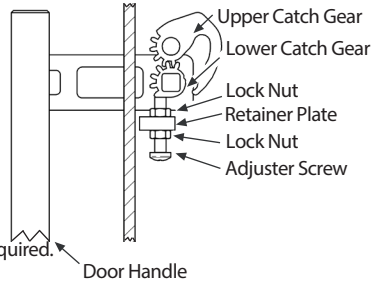

Figure 11-3

Installation (Continued)

Flue and chimney requirements

The flue pipe shall extend not less than 4.6m above the top of the floor protector. Note: Installation must be carried out by a licensed installer in accordance with AS/NZS 2918:2018.

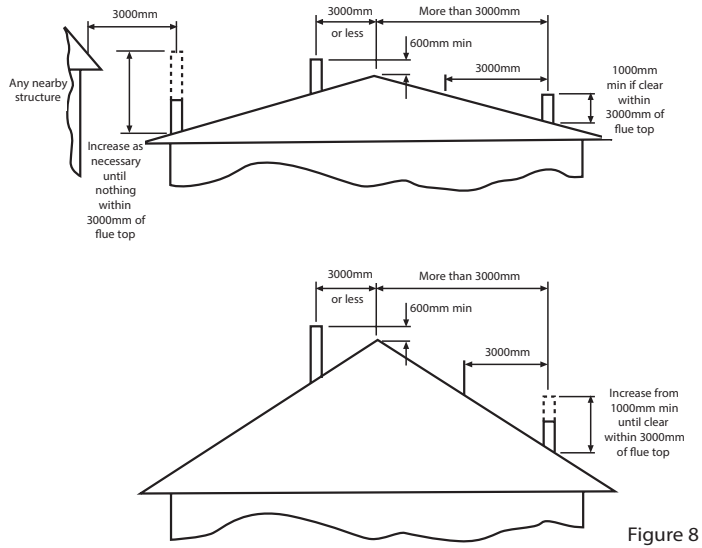

Figure 8

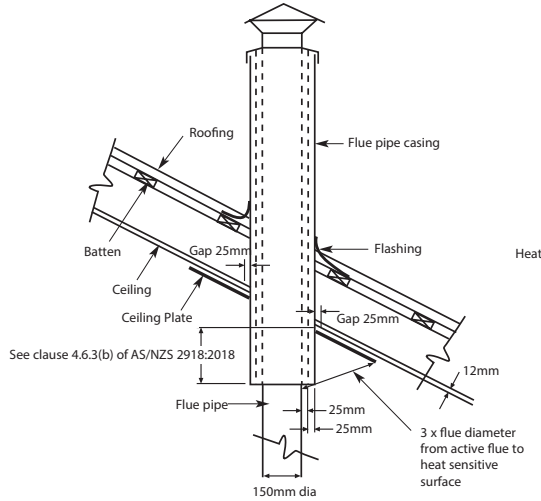

Figure 5. Example of sloped ceiling penetration

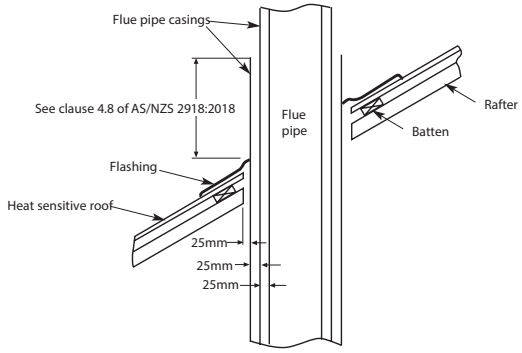

Figure 6. Example of roof penetration

Figure 9

Operating your Jindara

WARNING

Read these instructions

DO NOT ATTEMPT TO OPERATE THIS APPLIANCE WITHOUT READING AND UNDERSTANDING THESE OPERATING INSTRUCTIONS THOROUGHLY. FAILURE TO OPERATE THIS APPLIANCE PROPERLY MAY CAUSE UNDUE DAMAGE TO THE APPLIANCE OR RESULT IN A FLUE FIRE.

Starting your fire
Place a firelighter or paper in the bottom of the firebox and place a large amount of small kindling on top. Ignite the paper or the firelighter. Set the air control to high and leave the main door open approximately 25mm. When the kindling is burning, place about four pieces of small wood on top of the burning kindling. Once the wood is alight, close the main door. After approximately 20 minutes, turn the air control down to medium. For fan operation refer page 9.

On the initial fire up you may detect smoke coming from the paint finish and from any oils that may be on the steel on the outside of the firebox. This is normal. It is suggested to well ventilate your home on the initial fire up. Please refer to our section 'Paint Curing and Care' on page 2.

The glass door
Always operate your heater with the door closed and locked. The only time you can leave the door open is on initial lighting, or when reloading the heater.

Care of your glass
If you are burning good, dry wood, you will have very little discolouration of your glass in a normal burning cycle. If you aim for an eight to ten hour overnight burn, you should not get much discolouration. You can control this by adjusting the air control, moving from the left and slowly creeping the control to the right. After a number of days you will find the right position to suit your requirements and the fuel that you are using.

Daily operations
When you get up in the morning, open up the air control of the heater to high position to start the embers glowing. Place three or four pieces of wood on top of the embers and leave the door open 25mm. Once the fuel starts to flame close the door. Depending on your daily heating requirements, operate the fan as per fan operation instructions on page 9.
For best results it is best to burn 410mm long wood and load your wood straight into the firebox front to rear. This will give optimum efficiency and recoverable heat, and minimise creosote formation and smoke emissions.

Overnight burn
Approximately 30 minutes before turning the heater down to overnight burn it is recommended to load the heater with fuel for the overnight burn. Leave the air control in the medium to high position. Let the heater run for about thirty minutes. This will reduce the moisture content in the fuel before shut down. (This will help reduce the creosote formation in the firebox and flue.) Set the air control to the setting you have found best for your requirements. Turn the fan off and retire. The aim when overnight burning is to have only a few hot embers left in the bottom of the firebox in the morning, not huge lumps of wood.

Fan operation
Your Jindara Tilga is equipped with a temperature-sensitive thermostat switch located within the heaters pedestal beneath the firebox, which when selected will turn the fan on and off depending on the temperature of the firebox.
To use the thermostat, select the thermostat 'On' position via the thermostat switch, and select the desired fan speed you wish to use (low, medium or high).
If the fan is not coming on at the desired time, flip the switch into the override position and operate the 3 speed fan as described on page 9, with reference to figure 10.

Operating your Jindara (Continued)

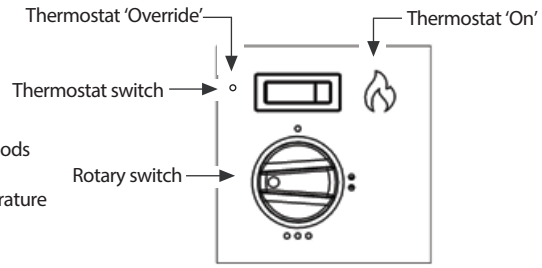

Figure 10

• Initial Startup (cold)
Leave fan off until the heater is hot and has established a coal bed - approximately 20 minutes after fuel is lit.

• Medium or High Burn Setting
If the heater is running above medium fire for extended periods of time, fan speeds medium and high are recommended.
High is recommended for short bursts where a quick temperature rise is desired in conjunction with a high fire setting.

• Low Burn Setting
The fan cools off the firebox, robbing the combustion process of efficiency. If you wish the fan can be left off only when the heater is burning a low fire.
Note: Improper use of fan can result in firebox failure.
The fan should be cleaned on a regular basis. (Refer Troubleshooting for fan removal and cleaning.)

WARNING

Operation of the Fan

If firebox failure is reported and it is found that the firebox has been abused through improper use of the fan, AF Gason Pty. Ltd. reserve the right to disallow any warranty claims in relation to firebox failure.

WARNING

The Door

Leaving Door Open

As stated previously, leaving door open 25mm encourages the fire to pick up at a faster rate. Your heater has been tested to ensure that no structural damage can take place if the door is inadvertently left open. However your paint finish can be damaged if the door is left open for a long period with a full firebox of fuel with the fan off. Closely supervise your heater while the door is left open.

Closing the Door

Always ensure that before you close your door there is no wood protruding beyond the front of the firebox opening. Do not use the door glass as a 'battering ram' to push the wood back into the firebox. Damage to the glass by such impact is not covered by your warranty.

Maintaining & Servicing your Jindara

Cleaning your flue (It is recommended that you seek the services of a licensed plumber to carry out flue maintenance).
Firstly and carefully remove cast iron plates and baffle system and put to one side. Close the heater door. Obtain a 150mm flue brush from your local Jindara Dealer and proceed up onto the roof. Remove the cowl. Slowly push the brush down the chimney until it stops. Pull the brush back out and repeat the process.
Each time you do this you will notice that the brush will go further down the chimney until it reaches the bottom.
The soot and creosote will fall down the chimney and into the firebox. Clean residue from firebox. Replace the baffle plate first, followed by the cast iron liners.
Make sure you do the job well. The cleaner the flue the less chance there will be of the creosote sticking again.
After you replace the cowl, inspect the roof flashing for any damage that may have incurred whilst you were cleaning the flue. Reseal the seal on the roof with roof and gutter silicon if required.